# PRODUCT SHEET

## Indoor Lockable Showcase With Sliding Doors Slim With Safety Cor

**SCSLR21xA4**

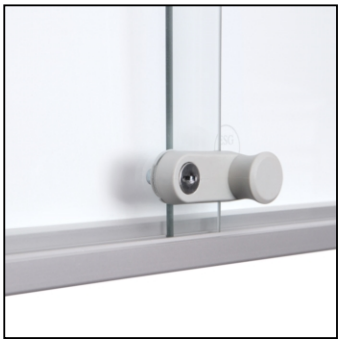

- **4 mm sliding security glass doors (ESG)**
- **With round ABS plastic corners for safety**
- **For indoor use B1 certified**

# PRODUCT SHEET

## Indoor Lockable Showcase With Sliding Doors Slim With Safety Cor

**SCSLR21xA4**

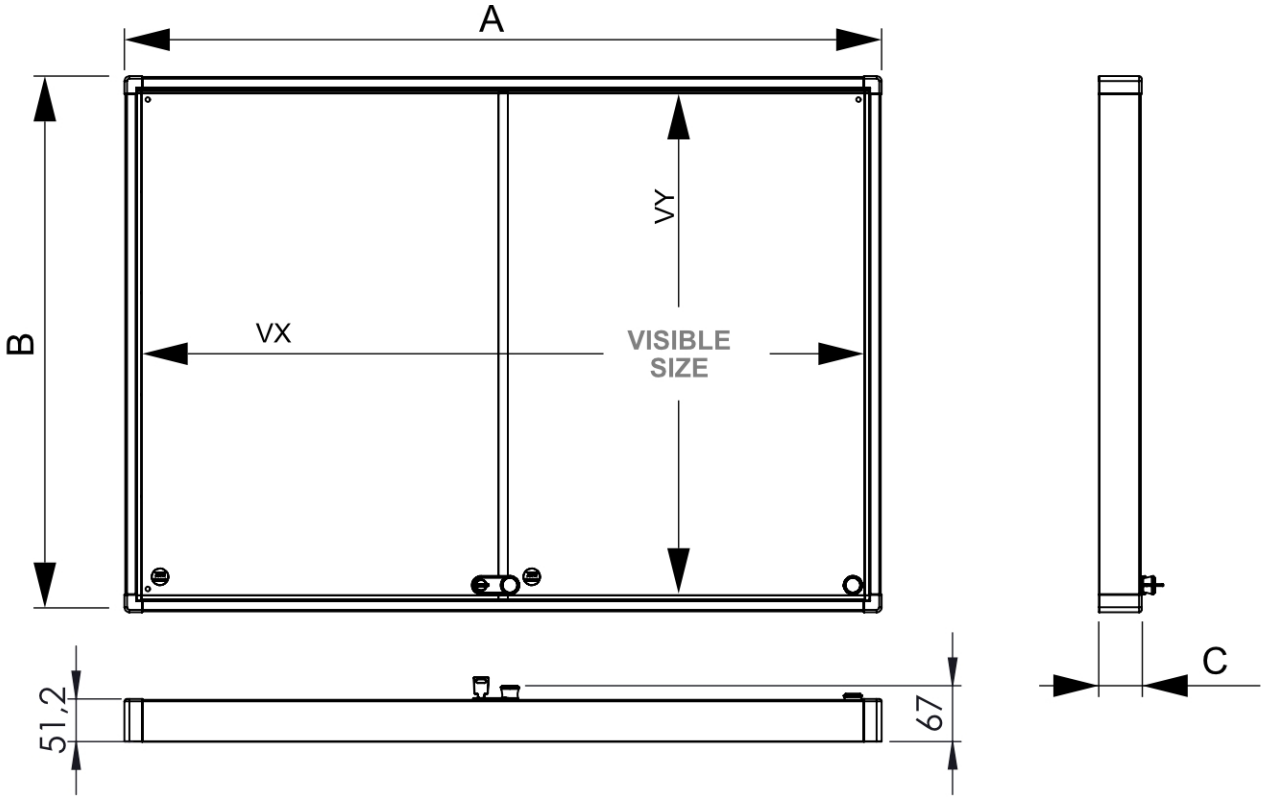


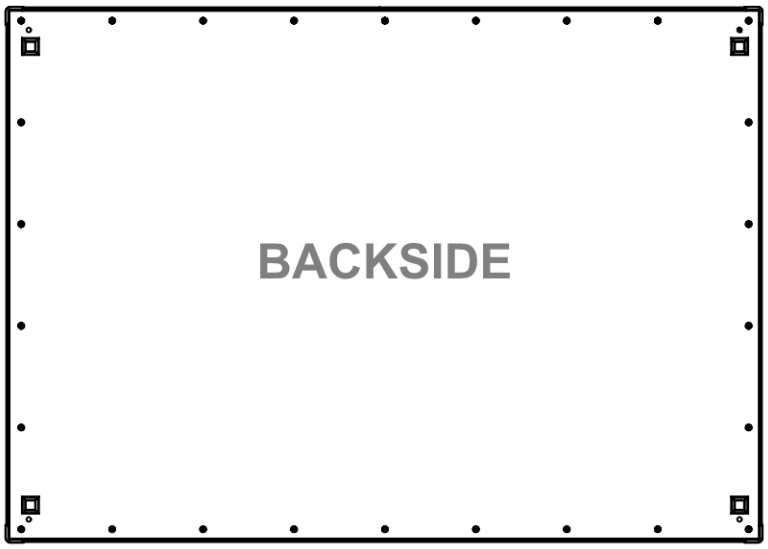


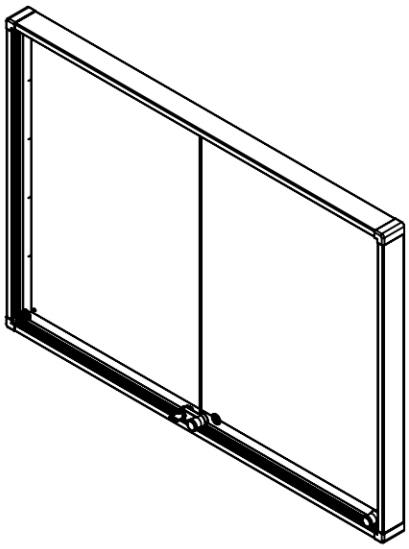

# PRODUCT SHEET

## Indoor Lockable Showcase With Sliding Doors Slim With Safety Cor

### SCSLR21xA4

## GENERAL INFO

| SKU | Sizes (mm) (A x B x C) | Format (mm) | Visible size (mm) (VXxVY) | Hole spacing (mm) (XxY) |
|---|---|---|---|---|
| SCSLR21xA4 | 1566 x 948 x 50 | 21 x A4 | 1540 x 922 | - |

| Orientation | Weight (kg) |
|---|---|
| Vertical | 25,20 |

## ELECTRICAL INFORMATION

| Illumination | Lighting colour (K) | Luminosity (cd) | Light intensity (lx) | Wattage (W) |
|---|---|---|---|---|
| No | - | - | - | - |

## PACKAGING INFORMATION

| Packaging unit 1 (mm) | Packaging unit 2 (mm) | Packaging unit 3 (mm) |
|---|---|---|
| 1662 x 1047 x 102 | - | - |

| Palette number of pieces | Palette weight (kg) | Palette type |
|---|---|---|
| 7 | 222 | EUR |

## ADDITIONAL INFORMATION

| Product certifications | EAN |
|---|---|
| DIN4102B1 | 8596052182709 |